ZOWN Plast Planet 180 klapborde (Ren UV behandlet polyethylene)

CONTRACTDESIGNFACTORY

QUALITY

10 års garanti
Gælder ved almindelig brug og slitage.

Dimensioner:
Bredde: Ø180,3 cm.
Højde: 74,3 cm.
Vægt: 26 kg.

Antal pladser: 10

Kan bruges inden- og udendørs

Bordet med lav vægt og høj bæreevne
Max belastning 350 kg.

Farve lys grå

Bordvogn til nem transport og opbevaring af ZOWN Planet borde.

Længde: 132 cm + 30 cm
Bredde: 83,2 cm
Højde: 102 cm
Farve: Mørk grå
Materiale: Pulvermalet stål
Vægt: 34,2 kg.
Kapacitet: 15 stk. Planet 120 / 15 stk. Planet 150 / 12 stk. Planet 180
Garanti: 10 års garanti ved almindelig brug og slitage

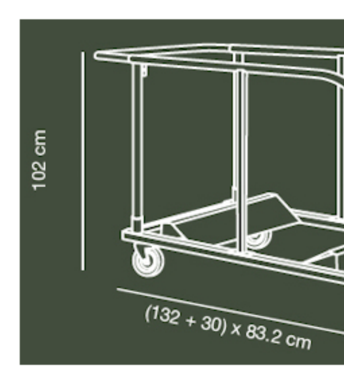

Bordvogn til nem transport og opbevaring af ZOWN Planet borde. Håndtaget kan udvides, for god beskyttelse af hænderne.
4 hjul med integrerede bremser.
Vognen kan udvides og passer derfor både til ZOWN Planet Ø120, Ø150 Ø180.

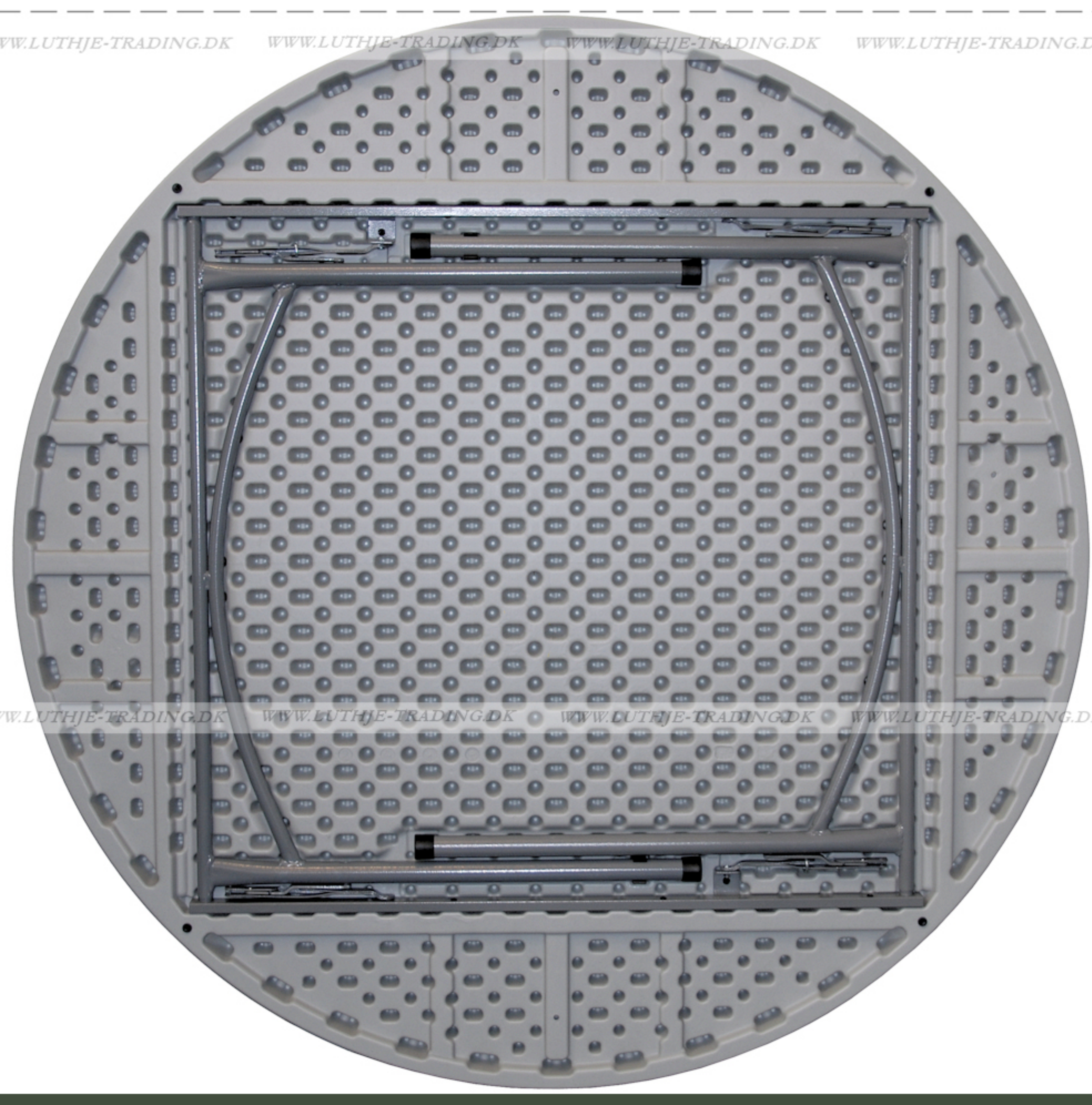

ZOWN COLLECTION

XL150 — TABLE MESA TABLE TISCH — 152.4x76.2x74.3 cm — 5'x30"x29.2" — Pg24
XL180 — TABLE MESA TABLE TISCH — 182.9x76.2x74.3 cm — 6'x30"x29.2" — Pg25
XL240 — TABLE MESA TABLE TISCH — 243.8x76.2x74.3 cm — 8'x30"x29.2" — Pg26

XLcorner — TABLE MESA TABLE TISCH — 76.2x76.2x74.3 cm — 30"x30"x29.2" — Pg29
XLmoon — TABLE MESA TABLE TISCH — 166.3x166.3x74.3 cm — 5.4'x 5.4'x 29.2" — Pg28
XLtrolley — TROLLEY CARRO CHARIOT WAGEN — (193+61)x77x115 cm — (76"+24")x30.3"x45.3" — Pg27

XXL90 — TABLE MESA TABLE TISCH — 91.4x91.4x74.3 cm — 36"x36"x29.2" — Pg30
XXL200 — TABLE MESA TABLE TISCH — 198.2x91.4x74.3 cm — 6.5'x36"x29.2" — Pg31
XXL240 — TABLE MESA TABLE TISCH — 240x91.4x74.3 cm — 8'x36"x29.2" — Pg32

XXLcorner — TABLE MESA TABLE TISCH — 91x91x74.3 cm — 3'x3'x29.2" — Pg35
XXLmoon — TABLE MESA TABLE TISCH — 181.5x181.5x74.3 cm — 5.9'x5.9'x29.2" — Pg34
XXLtrolley — TROLLEY CARRO CHARIOT WAGEN — (202+46)x92x115 cm — (79.6"+18.1")x36.2"x45.3" — Pg33

planet120 — TABLE MESA TABLE TISCH — ø122x74.3 cm — ø4'x29.2" — Pg36
planet150 — TABLE MESA TABLE TISCH — ø152.4x74.3 cm — ø5'x29.2" — Pg37
planet180 — TABLE MESA TABLE TISCH — ø180.3x74.3 cm — ø5.92'x 29.2" — Pg38

planettrolley — TROLLEY CARRO CHARIOT WAGEN — (132+30)x83.2x102 cm — (52"+11.8")x32.7"x40.2" — Pg39
M180 — TABLE MESA TABLE TISCH — 185.9x45.7x74.3 cm — 6'x18"x29.2" — Pg20
M240 — TABLE MESA TABLE TISCH — 243.8x45.7x74.3 cm — 8'x18"x29.2" — Pg21

L120 — TABLE MESA TABLE TISCH — 121.9x61x74.3 cm — 48"x24"x29.2" — Pg22
Ltrolley — TROLLEY CARRO CHARIOT WAGEN — 131.7x62x115 cm — 51.9"x24.4"x45.3" — Pg23
sharptable — TABLE MESA TABLE TISCH — 182.9x76.2x74.3 cm — 6'x30"x29.2" — Pg42

praxis80 — TABLE MESA TABLE TISCH — ø81.3x73 cm — ø32"x 28.7" — Pg41
cocktail80 — TABLE MESA TABLE TISCH — ø81.3x110 cm — ø32"x43.3" — Pg40
sharpbench — BENCH BANCO BANC BANK — 184x30.5x44.5 cm — 6'x12"x17.5" — Pg43

ottochair — CHAIR SILLA CHAISE STUHL — 47x54x84 cm — 18.5"x21.3"x33.1" — Pg44
ottotrolley — TROLLEY CARRO CHARIOT WAGEN — 110x47.7x190 cm — 43.3"x18.8"x74.8" — Pg45
normanchair — CHAIR SILLA CHAISE STUHL — 46.9x53.6x85 cm — 18.5"x21.25"x33.5" — Pg49

alexchair — CHAIR SILLA CHAISE STUHL — 44.5x46x79 cm — 17.5"x18.1"x31.1" — Pg46
alextrolley — TROLLEY CARRO CHARIOT WAGEN — 95.4x47.5x196.8 cm — 37.5"x18.7"x77.5" — Pg47
bostonchair — CHAIR SILLA CHAISE STUHL — 47x51x74 cm — 20"x18.5"x29.2" — Pg48

XL SYSTEM

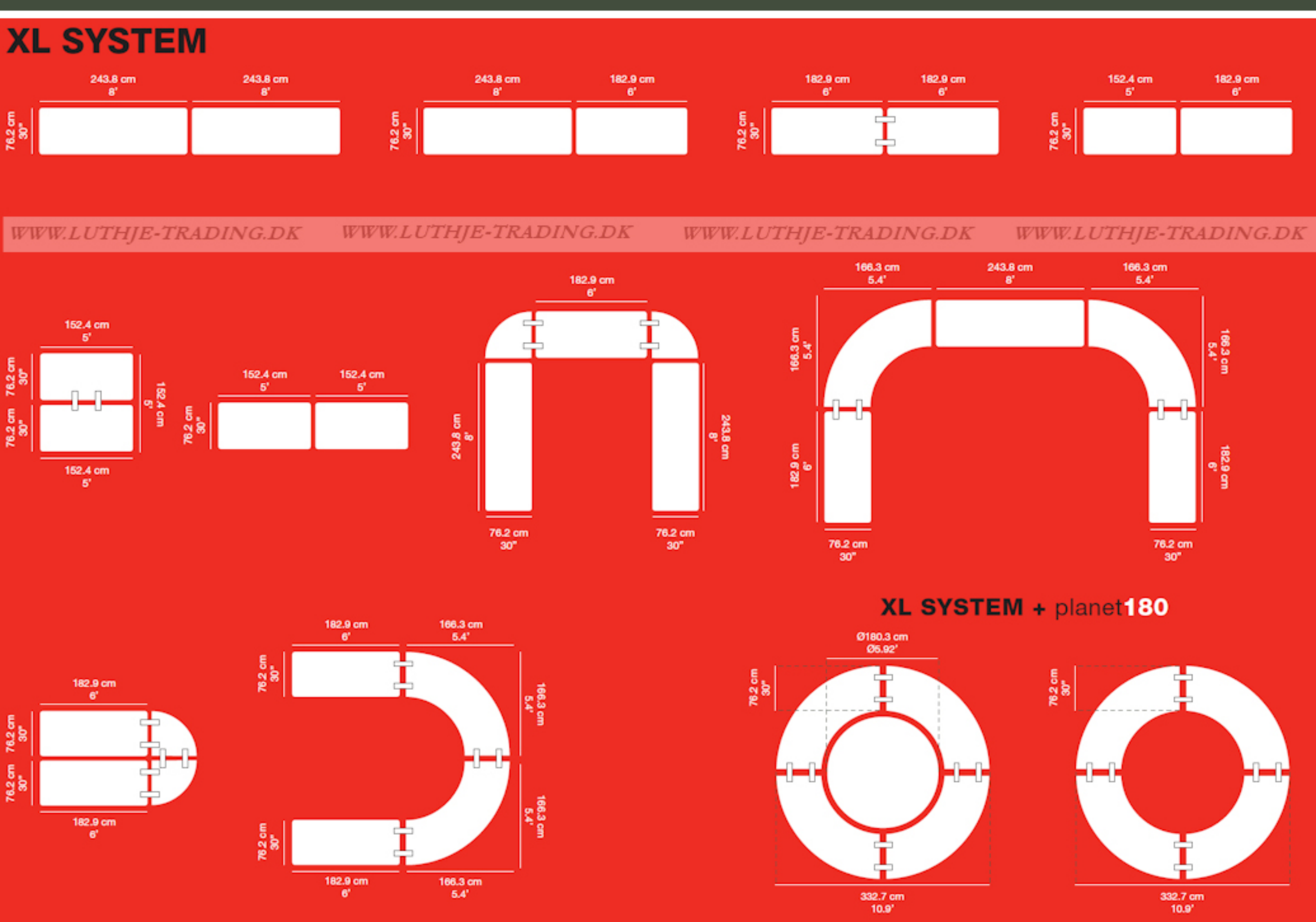

XL SYSTEM + planet180

XXL SYSTEM

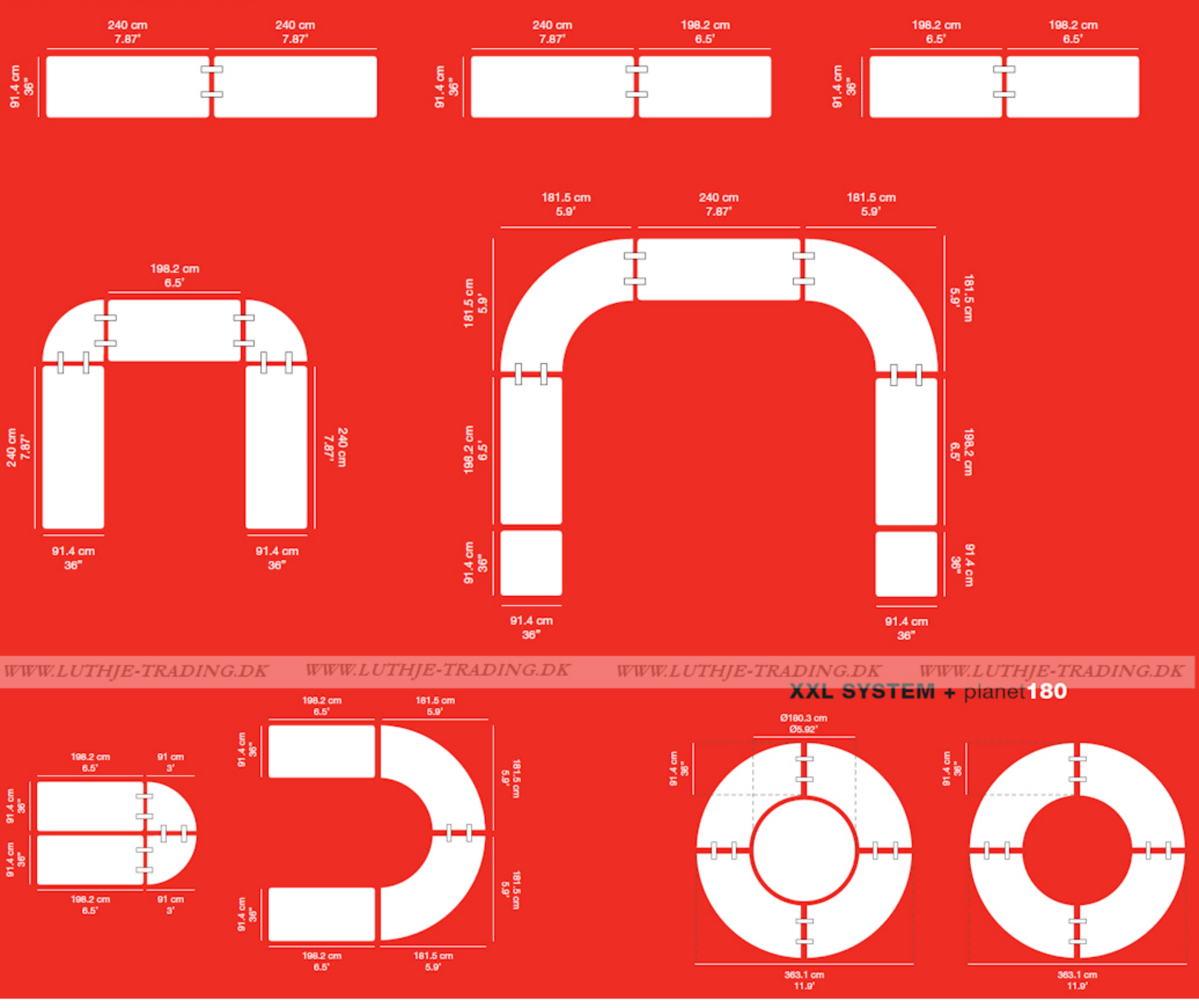

XXL SYSTEM + planet180

WWW.LUTHJE-TRADING.DK